United States Patent [19]

Hidding

[11] **3,902,621**

[45] **Sept. 2, 1975**

[54] **TAMPERPROOF CLOSURE WITH GRIPPABLE HANDLE**

[76] Inventor: **Walter E. Hidding,** Rt. No. 2, Woodrock Rd., Barrington Hills, Ill. 60010

[22] Filed: **Aug. 5, 1974**

[21] Appl. No.: **494,554**

[52] **U.S. Cl.** **215/252;** 206/807; 215/7; 215/216; 215/254

[51] **Int. Cl.**[2] **B65D 41/34;** B65D 41/38

[58] **Field of Search** 206/807; 215/7, 9, 216, 215/252, 254

[56] **References Cited**

UNITED STATES PATENTS

2,414,420	1/1947	Sebell	215/252
3,310,191	3/1967	Kern et al.	215/252
3,504,818	4/1970	Crisci et al.	215/252
3,517,847	6/1970	Guala	215/256
3,737,064	6/1973	Patel et al.	215/7
3,809,271	5/1974	Stroud	215/9
3,837,518	9/1974	Gach	215/9
3,850,329	11/1974	Robinson	215/254

Primary Examiner—William T. Dixson, Jr.
Assistant Examiner—Bruce H. Bernstein
Attorney, Agent, or Firm—Olson, Trexler, Wolters, Bushnell & Fosse, Ltd.

[57] **ABSTRACT**

A tamperproof cap structure, including a cap, a locking ring and a handle are provided for use with a bottle or similar container having one or more teeth fashioned adjacent a reduced bottleneck. The cap structure locking ring is provided with one or more pawls positioned to mate with the container neck teeth to prevent the cap from being unscrewed from the container. Frangible connectors which rigidly connect the locking ring and cap can be broken if sufficient unscrewing torque is applied to the cap; and the broken connectors and dropped ring provide visual evidence that tampering has at least been attempted. The ring is also provided with a handle which can be grasped to rip the ring away from the cap. Permanent distortion of handle S-members and breakage of the frangible handle web provide another indication of attempted tampering.

12 Claims, 7 Drawing Figures

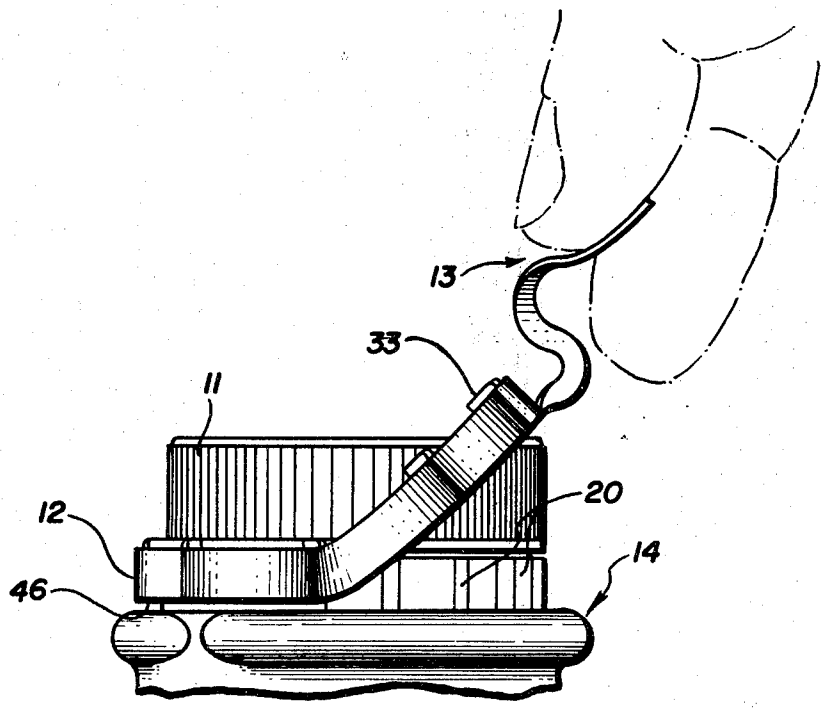

FIG.1

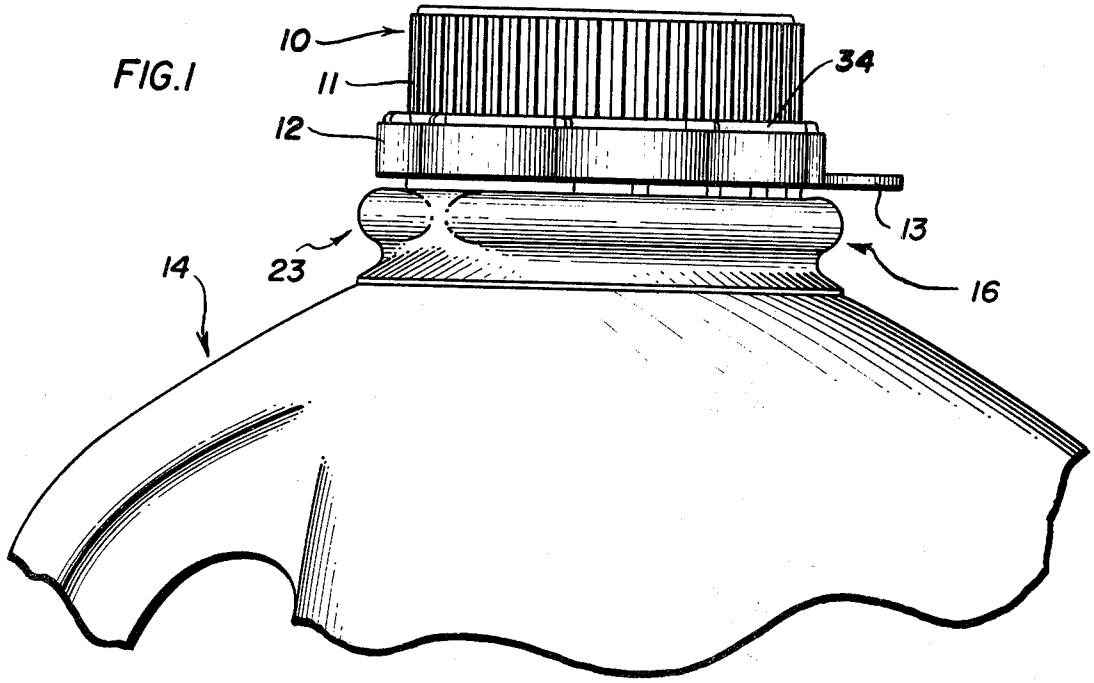

FIG.2

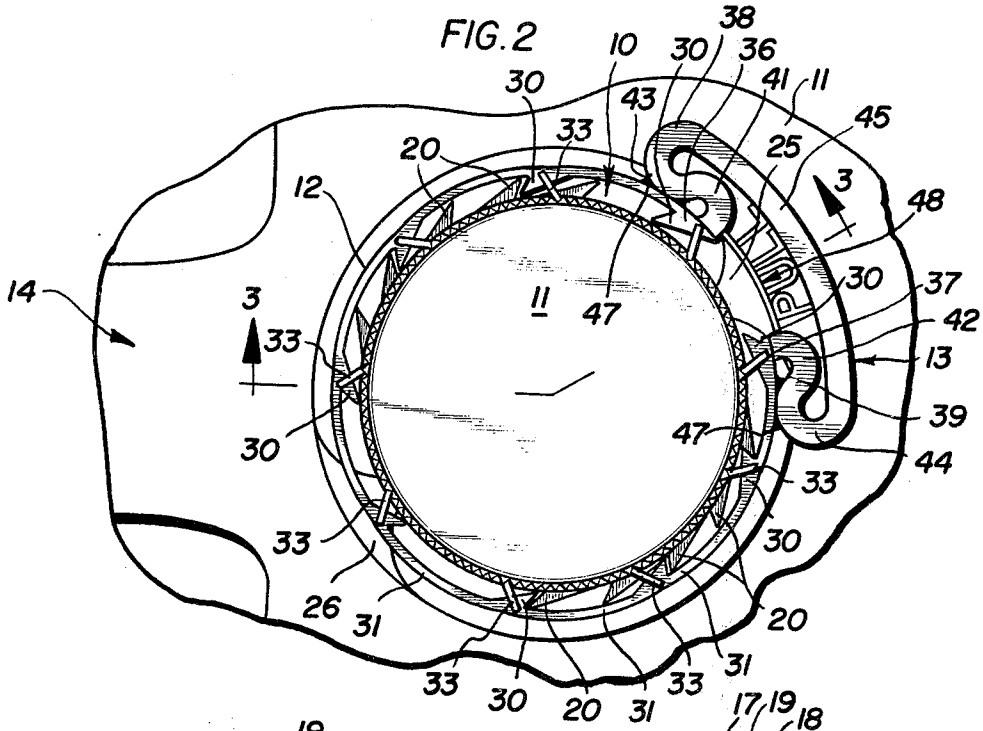

FIG.3

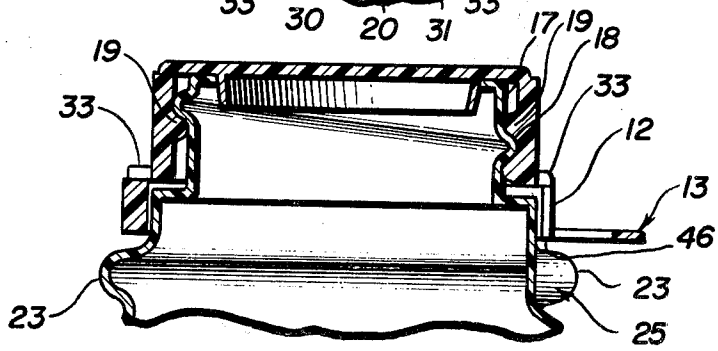

FIG.4

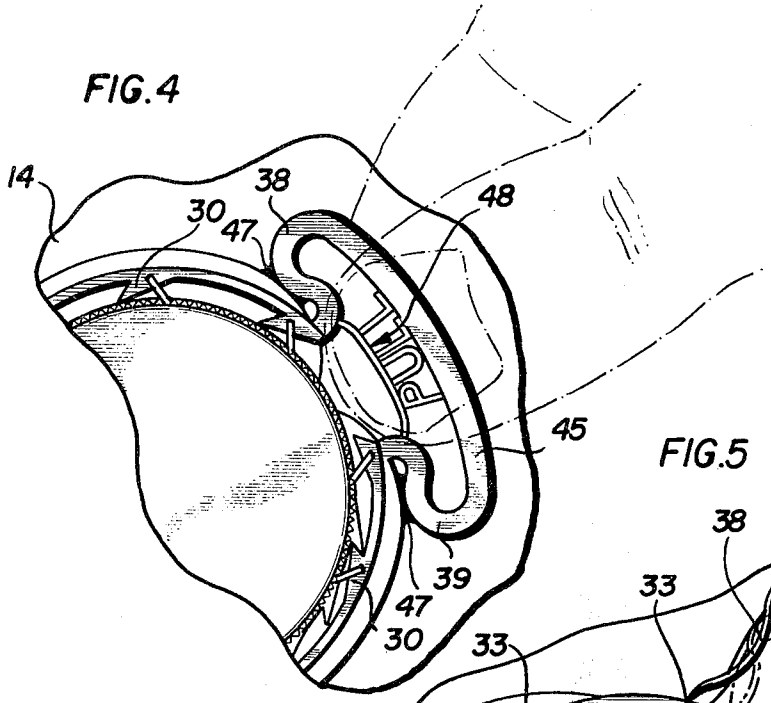

FIG.5

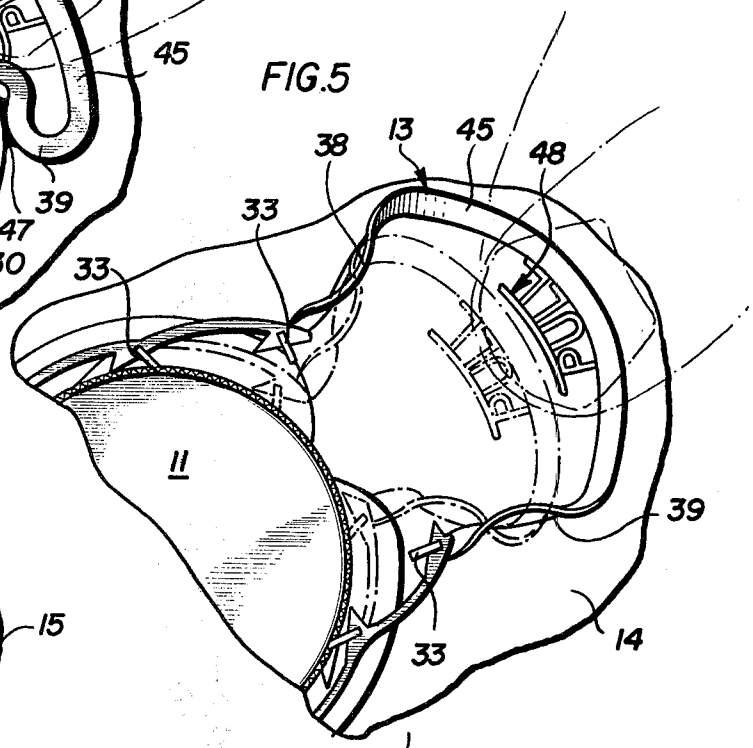

FIG.7

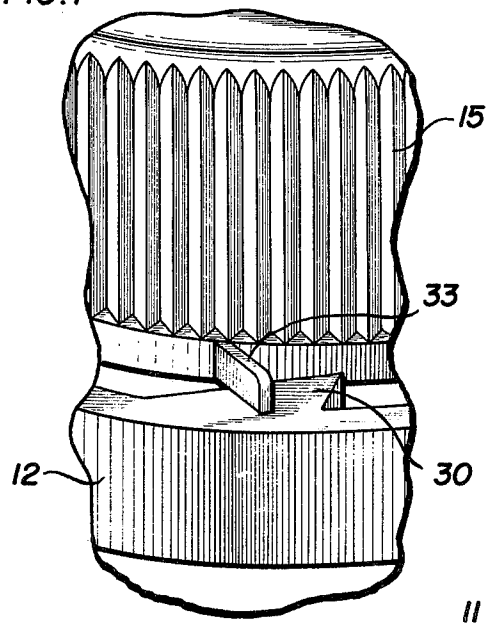

FIG.6

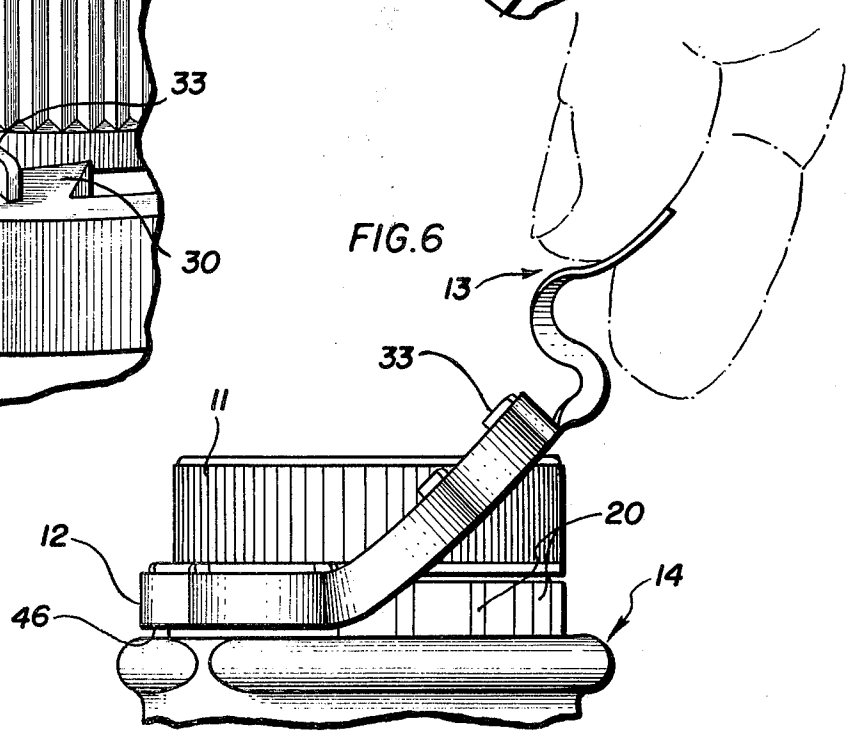

TAMPERPROOF CLOSURE WITH GRIPPABLE HANDLE

BACKGROUND OF THE INVENTION

This invention relates generally to bottle closures, and more particularly concerns tamperproof caps which positively indicate the results of mishandling or tampering, yet which can be easily used by even inexperienced personnel.

Container closures previously have been offered which include screw-on caps and integral cap locking rings designed to prevent removal of the cap from the container without damage to the ring and the ring-cap connection. Some of these devices are disclosed in copending U.S. Patent application Ser. No. 437,778 filed Jan. 30, 1974, and in Crisci et al U.S. Pat. No. 3,540,818. In these devices, when the cap is unscrewed from the container, the locking ring is broken away from the cap. A visual indication of at least attempted tampering or opening is thus provided.

Some container closures of this general type have additionally included second or alternate means for disconnecting the locking ring from the cap and the container. One such device is that disclosed in U.S. Pat. No. 3,560,428 to Miller; there, a pull handle is connected to the locking ring to permit the ring to be partially or completely ripped away from the cap and container.

It is the general object of the present invention to provide a novel bottle closure cap and associated locking ring and handle device at low cost which will positively signal the occurrence of attempted or actual tampering.

It is another object of the invention to provide a tamperproof cap structure having a cap locking ring removal handle which can be easily used, even by persons unfamiliar with such devices. A related object is to provide a container cap, locking ring and cap handle structure wherein tampering actions break parts of the handle, thereby providing positive and relatively dramatic visual evidence of tampering. Another related object is to provide a tamperproof cap structure having a cap locking ring removal handle which folds out to accommodate full insertion of a human finger for easy, positive, quick handle and locking ring removal.

Another object is to provide a cap structure which can be opened to provide access to the container contents either by unscrewing a cap to break away a locking ring or by using a handle to rip the locking ring away from the cap.

Yet another object is to provide a cap structure of the described type which is inexpensive and relatively easy to manufacture.

Other objects and advantages of the invention will become apparent upon reading the following detailed description and upon reference to the drawings. Throughout the description, like reference numerals refer to like parts.

BRIEF DESCRIPTION OF THE DRAWINGS

FIG. 1 is a side elevational view showing the bottle-type container and the novel closure cap, locking ring and handle;

FIG. 2 is a top plan view showing the bottle, the cap, the locking ring and the handle as they appear when aligned with a bottle collar for removal of the locking ring and handle from the bottle;

FIG. 3 is a sectional view taken substantially in the planes of line 3—3 in FIG. 2;

FIG. 4 is a fragmentary top plan view showing the bottle and cap structure as they appear when the cap handle is being pulled to rupture portions of the cap structure in preparation for removal of the locking ring;

FIG. 5 is a fragmentary top plan view similar to FIG. 4 but showing the cap structure as it appears when rupture of cap parts and relatively full extension of the cap handle has occurred;

FIG. 6 is a side elevational view of the cap structure and bottle similar to FIG. 1 but showing the cap structure as it appears after the handle has been extended and as the cap locking ring is being removed; and

FIG. 7 is a fragmentary perspective view showing details of the structure by which the cap and cap locking ring are formed and held together.

DETAILED DESCRIPTION

While the invention will be described in connection with a preferred embodiment, it will be understood that it is not intended to limit the invention to this embodiment. On the contrary, it is intended to cover all alternatives, modifications and equivalents as may be included within the spirit and scope of the invention.

Turning more specifically to FIG. 1, a cap structure 10 is shown. Here, the cap structure 10 can be generally considered to include a cap portion 11, a locking ring 12, and a handle 13 all secured, directly or indirectly, to a container 14, which may take the form of a milk jug or similar object. It is contemplated that the illustrated cap 11, the locking ring 12 and the handle 13 will be originally formed as a single piece by injection molding or other known method from a suitable resinous plastics material such as polyethylene or acrylonitrile-butadiene-styrene. Knurling or vertical ribbing 15 is fashioned on the outside sidewall of the cap 11 as an aid in transmitting full turning torque to the cap by a user. The container bottle 14 may also be formed of suitable resinous plastics material; and the bottle has a reduced neck portion 16 which includes an extension 17 having formed thereon an external or male cap-securing thread 18 for mating with an internal or female helical screw thread 19 inside the cap. Below the extension 17, a suitable number of triangular ratchet teeth 20 are fashioned. While a single ratchet tooth may be employed, the illustrated preferred embodiment provides a number of such teeth arranged in several spaced apart ratchet tooth sections, as seen particularly in FIG. 2. Below these teeth 20, a collar portion 23 extends radially outwardly. In the illustrated embodiment, this collar is interrupted by two diametrically opposed recesses 25 and 26.

To lock the cap structure 10 on the container 14, a number of circumferentially spaced, triangularly shaped pawls 30 are provided on the inside surface of the locking ring 12, and are positioned to extend radially inwardly so as to engage one or more of the container ratchet teeth 20. When the cap structure 10 is turned clockwise, as shown in FIG. 2, to assemble the cap structure on the container the locking ring pawls 30 ride over the container ratchet teeth 20. To facilitate this overriding motion, the locking ring 12 includes relatively thin sections 31 disposed between the relatively thick teeth 30; when overriding motion occurs, these thin sections 31 flex to permit temporary radially outward extention of the pawls 30. It is also to be noted

that the bottle male thread **18** and the cap internal female thread **19** are formed with appropriately oriented mating helices so that clockwise motion of the cap **10** screws or turns the cap **11** into closed assembly with the container bottle **14.** Thus, initial attachment of the cap end to the bottle container **11** requires only a simple screw-down motion. However, counterclockwise, unscrewing retrograde motion of the cap structure **10** (once it has been assembled upon the bottle) causes the pawls **30** of the locking ring **12** to engage the bottle teeth **20**; this pawl-tooth engagement prevents more than a minor retrograde unscrewing motion without causing damage to the cap structure **10.**

A connecting device couples the locking ring **12** to the cap **11,** and transmits the cap-retaining action of the locking ring **12** to the cap **11.** Here, this connecting means takes the form of individual, spaced connectors **33** which individually join the pawls **30** to an unknurled cap base, as illustrated particularly in FIG. **2.** The connectors **33** are oriented to extend outwardly in extended chordal relationship to the cap **11** between the cap and the larger-diameter locking ring **12.** So oriented, the connectors **33** provide both frangible connections between the cap **11** and locking ring **23,** and also define pivot points about which the pawls **30** can rock as they pass over the ratchet teeth **20** during screw-on assembly of the cap **10** and bottle **14.** Conversely, the breakable connectors **33** hold the respective pawls **30** in engagement with the container teeth **20** when the cap **11** is turned in an unscrewing or opposite direction, and prevent the pawls **30** from riding out of engagement with the ratchet teeth **20** under such conditions.

It is a feature of the invention that these connectors **33** provide one indication of bottle tampering, as well as acting as cap-ring force transmitters. When it is desired to gain access to the contents of the container **14,** the cap **11** is grasped and rotated in a counterclockwise unscrewing direction, as can be envisioned from FIG. **2.** This motion causes the bottle thread **18** and cap thread **19** to cooperate in slightly unseating the cap **11** from the bottle **14.** However, rotation of the cap **11** in this unscrewing counterclockwise direction brings the pawls **30** into engagement with the bottle teeth **20.** Upon application of sufficient unscrewing torque to the cap **11,** at least some of the connectors **33** are broken, and the ring **12** may partially or completely drop away from the cap **11** to rest around the bottleneck. These damaged connectors **33** and the dropped position of the ring **12** provides one indication that the container has been opened. After opening, the ring **12** may be fully stripped away from the container and removed, if desired. The cap **11** is, of course, used as a reclosure device.

In accordance with the invention, the tamperproof cap is provided with structure which permits the ring **12** to be ripped away from the cap **11** in a quick and easy manner by even inexperienced users. Further, the novel cap structure provides a second or alternate indication of at least attempted container tampering or opening. To this end, the ring **12** terminates in two spaced apart ends **36** and **37** which are located on the ring circumference with respect to the pawls **30** so as to be aligned on opposite sides of the container collar recess **25,** as illustrated particularly in FIG. **2.** At each ring end **36** and **37** there is fashioned a deformable, reversely bent S-member **38** and **39,** respectively. In the illustrated embodiment, each S-member can be considered to originate in a radially outwardly extended curve **41** or **42,** respectively, and to terminate in a reversely bent inwardly extended folded curve **43** or **44,** respectively. An arcuate pull tab member **45** extends between the S-members, and here has generally the same dimensional appearance and cross-sectional shape as the S-members **38** and **39.**

It is a feature of the invention that the S-members **38** and **39** and handle **13** are encouraged to lie in the same plane as a bottom surface **46** of the ring **12.** To this end, a thin, frangible flashing member **47** can be formed in the plane of the ring bottom surface **46** to interconnect the ring **12** and one curved **43** and **44** of each S-member **38** and **39,** respectively. This frangible flashing is broken when the handle **13** is pulled as illustrated in FIG. **5.**

Extending between the S-members **38** and **39** and the pull tab **45** is a frangible web member **48.** In the illustrated embodiment, this frangible web member **48** is formed in the shape of letters spelling out the word "pull," thus providing directions for use of the device to an inexperienced user. It is within the purview of the invention that fanciful designs or alternate words could also be formed within this frangible web member. When the S-members **38** and **39,** the pull tab **45,** the flashing member **47** and the frangible web **48** are arranged as illustrated, the entire handle **13** is stored in a compact, neat fashion adjacent the container neck **16.**

Sequential reference to FIGS. **4, 5** and **6** will show the method by which the cap **11** is freed for removal from the container **14.** First, as illustrated in FIG. **4,** the pull tab member **45** is grasped, and then is pulled in a direction generally radially outwardly from the cap **11.** This action breaks any flashing member **47** which may be present and the frangible member **48,** and may permanently deform the S-members **38** and **39** as shown in FIG. **5.** It is a feature of the invention that the damage to at least the frangible member **48** is highly visible and the permanent torsional deformation of the S-members **38** and **39** is also apparent. This visible damage signals any subsequent observer that attempted or actual container tampering or opening has occurred.

In accordance with a further aspect of the invention, the S-members **38** and **39** are formed with sufficient cross-sectional area and are otherwise of sufficient strength to be torsionally and tensionally stronger than the connectors **33,** thereby encouraging breakage of the connectors **33** and not the S-members or pull tab when continued pulling effort is applied to the handle **13.** Thus, breakage of the frangible member **48** and any flashing members **47** occurs with some extension of the pull tab **45,** and breakage of the ring connectors **33** occurs as further extensive effort is applied to the handle **13.** After the handle **13** is extended a sufficient distance, as illustrated in FIG. **6,** it can be pulled up and over the cap **11** to rip away the ring **12** from the cap **11** and the container **14** to present a neat container appearance. To assist and encourage this, the container collar recess **25** located adjacent the handle **13** permits the user to slip his finger within the S-members **38** and **39** and the pull tab **45,** to more easily pull the lock ring **12** and handle **13** away from the cap **10** and container **14.**

As indicated above, it is another feature of the invention that the handle **13** lies in a plane substantially co-

planar with the bottom surface **46** of the ring **12**, as illustrated in FIG. **3**. The connectors **33**, however, lie in a plane adjacent the top of the ring **12**, thereby permitting a torsional or camming force to be applied to the connectors to increase the ease with which they are broken, as can be envisioned by reference to FIG. **6**.

It will be apparent from the foregoing description that there has been provided a tamperproof closure that is of particular advantage in both use and manufacture. The drawings and the foregoing description are therefore not intended to represent the only form of the invention in regard to the details of its construction and manner of use. Changes in form and the proportion of parts, as well as the substitution of equivalents, are contemplated as circumstances may suggest or render expedient; and although specific terms have been employed, they are intended in generic and descriptive senses only and not for the purposes of limitation, the scope of the invention being delineated by the following claims.

The invention is claimed as follows:

1. A tamperproof cap for use with a container having a threaded neck portion and at least one external tooth, said cap comprising: an internally threaded cap body; an interrupted tamperproof ring having a plurality of circumferentially spaced, radially inwardly extending, triangularly shaped pawls for locking engagement with said container tooth in a first direction of rotation; breakable connector means coupling said ring to said cap body, said connector means being joined to said pawls for holding one of said pawls in engagement with said container tooth, the interrupted ring terminating in two spaced apart ends; and a handle attached to the ring adjacent the interrupted ring ends, the handle including a deformable, reversely bent S-member attached to each ring end, mounted radially outwardly of the ring, and terminating in a free end, a pull tab member extending between the S-member free ends, and a frangible web member extending between at least one S-member and the pull tab, whereby the frangible member is permanently and visibly broken and at least one S-member is permanently and visibly deformed when the pull-tab is pulled with more than a minimum force.

2. A tamperproof cap according to claim **1** wherein said S-members are torsionally and tensionally stronger than the frangible members, thereby encouraging breakage of the frangible members and deformation of the S-members when the pull tab is pulled with more than a minimal force.

3. A tamperproof cap according to claim **1** wherein said S-members are torsionally and tensionally stronger than any of said connector means thereby encouraging breakage of the connector means when continued pulling effort is applied to the handle in excess of a minimal force.

4. A tamperproof cap according to claim **1** wherein said frangible web member extends between and is connected to both S-members and said pull tab.

5. A tamperproof cap according to claim **1** wherein said frangible member is formed to provide directions for use to a handle puller.

6. A tamperproof cap according to claim **1** wherein said S-members are each attached to a respective ring end, lie adjacent said ring, and extend away from the opposite ring end and opposite S-member to compactly configure the handle.

7. A tamperproof cap according to claim **1** wherein said handle member lies in a plane adjacent a bottom surface of said ring, and wherein said connector means lie in a plane adjacent the top of said ring.

8. A tamperproof cap according to claim **7** wherein said cap body is provided with an unknurled annular base, and wherein said connector means extend between said base and said pawls.

9. A tamperproof cap according to claim **1** including frangible means interconnecting one bend of said S-member and said ring, said frangible member operating to encourage said S-member to lie in a plane substantially coplanar with the bottom of said ring and being breakable when said pull-tab is pulled with more than said minimum force.

10. A tamperproof cap for use with a container having a threaded neck portion, a radially extended collar portion below the neck portion, the collar radial extension being interrupted by at least one recess, and at least one external container tooth located in a predetermined position on said container, said cap comprising: an internally threaded cap body; an interrupted tamperproof ring having a radially inwardly extending, triangularly shaped pawl for locking engagement with said container tooth in a first direction of rotation and riding over said container tooth in a second, opposite direction of rotation, said pawl being spaced apart from said ring interruption by a predetermined amount to locate said ring interruption adjacent said container collar recess, breakable connector means coupling said ring to said cap body, said connector means being joined to said pawl for holding said pawl in engagement with said container tooth whereby to insure breaking of said connector means and releasing said ring from said cap body upon rotation of said cap in said first direction, the interrupted ring terminating in two spaced apart ends, and a deformable, partially frangible handle attached to the ring radially outwardly of and adjacent the interrupted ring ends and located adjacent said container collar recess when said pawl engages said container tooth.

11. A tamperproof cap according to claim **10** wherein the handle includes: a deformable, reversely bent S-member attached to each ring end, mounted radially outwardly of the ring, and terminating in a free end; a pull tab member extending between the S-member free ends; and a frangible web member extending between at least one S-member and the pull tab, whereby the frangible member is permanently and visibly broken and at least one S-member is permanently and visibly deformed when the pull-tab is pulled with more than a minimum force.

12. A tamperproof cap according to claim **11** including frangible means interconnecting one bend of said S-member and said ring and lying in a plane substantially coplanar with the bottom of said ring and said S-member.

* * * * *