July 5, 1932. L. J. RUSSELL 1,866,323

PACKAGE FOR DISPLAYING MERCHANDISE

Filed April 5, 1929

Fig. 1

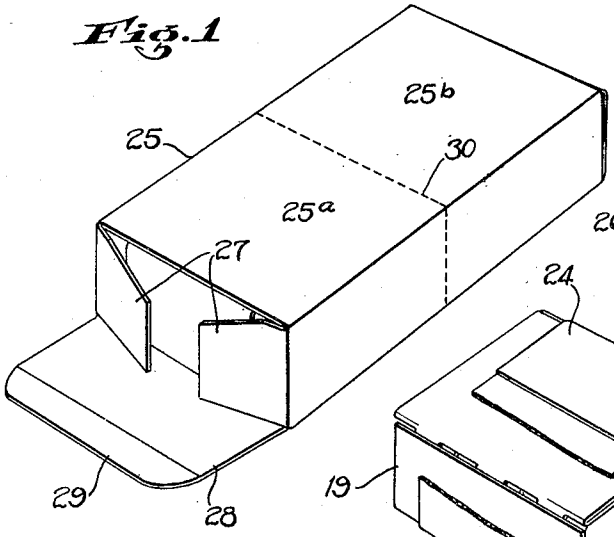

Fig. 2

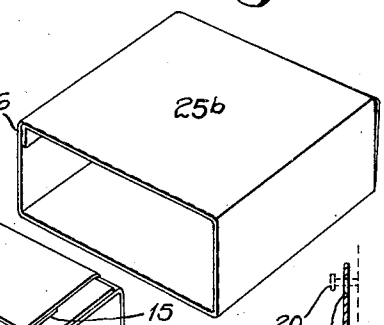

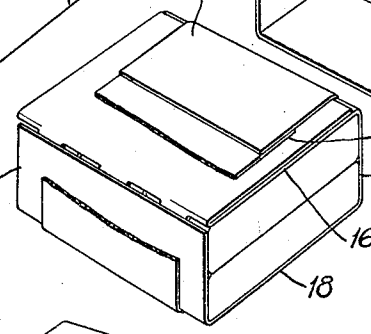

Fig. 3

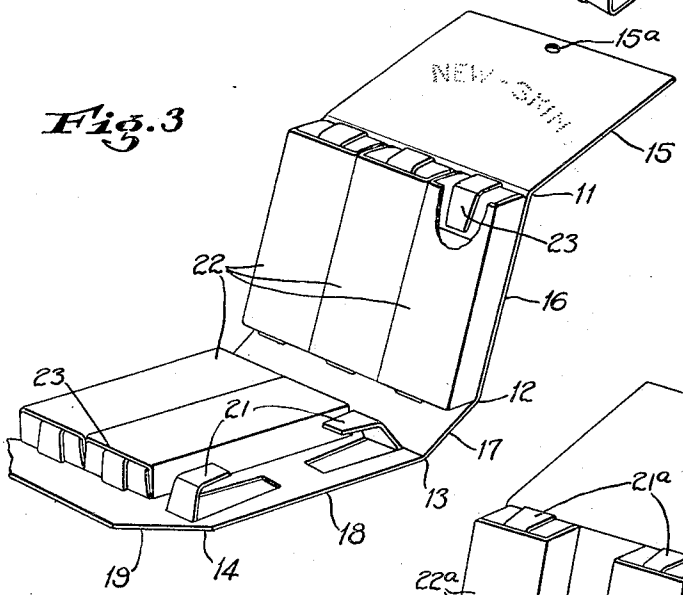

Fig. 4

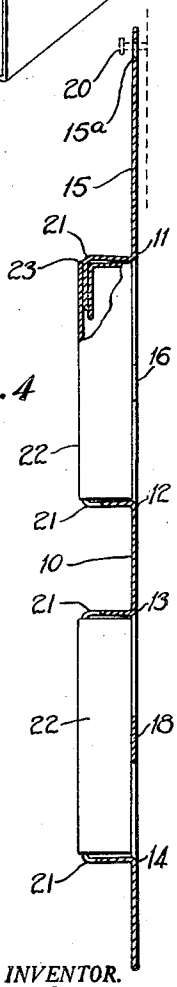

Fig. 5

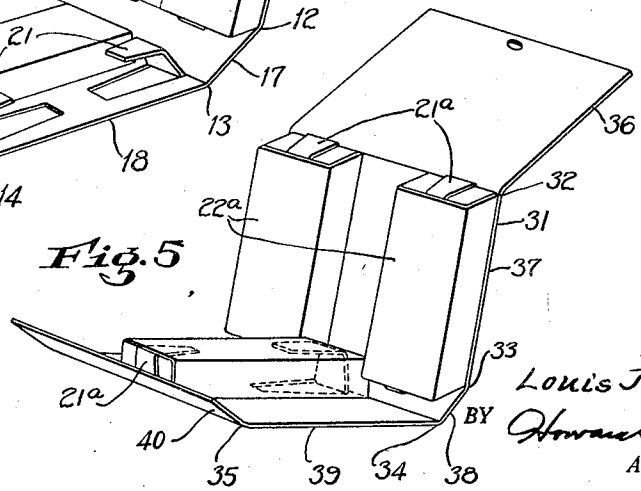

INVENTOR.
Louis J. Russell
BY Howard C. Thorpe
ATTORNEY

Patented July 5, 1932 1,866,323

UNITED STATES PATENT OFFICE

LOUIS J. RUSSELL, OF RICHMOND HILL, NEW YORK

PACKAGE FOR DISPLAYING MERCHANDISE

Application filed April 5, 1929. Serial No. 352,622.

This invention relates to the packing and displaying of merchandise of various kinds and classes and the object of the invention is to provide a mounting and display card or board having means for supporting a plurality of packages or articles thereon so as to constitute a unit part thereof and said mounting and display card being foldable in such manner as to form thereof and in conjunction with the packages or articles thereon, a compact body of predetermined form which is provided with means for retaining the folded parts in compact state and is adapted to be inserted into a box or wrapper preferably of collapsible construction and including end wall members; a further object being to provide the box or wrapper in which two or more of the compact packages are adapted to be placed with one or more perforated lines extending entirely around the periphery of the box at a point intermediate or in alinement with adjacent or abutting edges of said packages so as to permit the rupturing of the box along the lines of perforations to form two or more independently boxed packages from which the compact package and display may be removed and a card extended to hang upon a wall or be otherwise displayed and from which the articles may be removed as and when sold; a further object being to provide a mounting and display card wherein a plurality of articles or packages may be arranged in an intermeshing fashion so as to form a relatively thin package of the mounting card and articles when moved into compact position; and with these and other objects in view, the invention consists in an article of manufacture of the class and for the purpose specified, which is simple in construction, efficient in use, and which is constructed as hereinafter described and claimed.

The invention is fully disclosed in the following specification, of which the accompanying drawing forms a part, in which the separate parts of my improvement are designated by suitable reference characters in each of the views, and in which:—

Fig. 1 is a perspective view of a container made according to my invention and illustrating one end thereof in open position.

Fig. 2 is a perspective view of one severed part of a container with its package removed.

Fig. 3 is a perspective view of the package shown in Fig. 2, partly extended.

Fig. 4 is a longitudinal, sectional view through the device shown in Fig. 3 fully extended; and,

Fig. 5 is a view similar to Fig. 3 showing a modification.

For the purpose of illustrating one method of carrying my invention into effect, I have shown in Figs. 1 to 4 inclusive, one form of construction. In practice, I provide a mounting and display card 10 consisting of an elongated strip or sheet of cardboard or similar material, which is scored or creased at 11, 12, 13 and 14 to divide said strip into separate sections 15, 16, 17, 18 and 19, the sections 16 and 18 constituting article supporting sections, whereas the sections 15, 17 and 19 are preferably printed or lithographed in such manner as to describe or otherwise advertise the products arranged on the sections 16 and 18.

It is also preferred that the upper edge of the section 15 be provided centrally with an aperture 15*a* whereby the entire display may be supported upon a hook or nail 20 secured to a suitable support as indicated in Fig. 4 of the drawing.

Each section 16 and 18 is cut out to form pairs of hook-shaped supporting tongues 21 hingedly supported adjacent the upper and lower folding lines of said sections in the manner clearly seen in the section 18, Fig. 3 of the drawing, so that articles contained in relatively small boxes 22 may be supported upon the sections 16 and 18 by passing the tongues 21 into the end portions of the boxes as seen at 23 in Fig. 3 of the drawing. It will be understood that the width of the section 17 is equal to the combined width or thickness of the boxes 22 on both of the sections 16 and 18. When all of the boxes are arranged on said sections, the card 10 may be folded into the position shown in Fig. 2 of the drawing, in which position, it will be

seen that the section 15 is folded backwardly upon the section 16, and the section 19 is folded upon the ends of the boxes 22 opposite the section 17.

When the parts are in this position, a thin paper or other band 24 is passed around the same in the manner seen in Fig. 2 to retain the several sections in folded position.

In practice, two of these packages are inserted into a box 25 which is more or less of conventional form and is preferably of the collapsible type consisting of side walls joined as seen at 26, note Fig. 2, the ends of the box being closed by inner flaps 27 and an outer flap 28 arranged over the flaps 27 and having a tongue 29 insertable into the box retaining the packages against displacement therefrom.

The novel structure of the box resides in the provision of a continuous perforated line 30 which extends entirely around the walls of the box centrally of its ends and arranged in alinement with the adjacent inner ends of the packages mounted in the box so that whenever desired, the separate parts 25*a* and 25*b* of the box may be separated by applying stress to the perforated line 30 or by running the finger of a nail or a tool along the perforated line as will be apparent so as to leave two independent box members with the independent packages contained therein.

The box member 25*b* is shown in detail in Fig. 2 with its package extended or removed. When the package is removed, the band 24 may be ruptured or slid off from the package to release the several sections of the mounting card and permit the same to be extended into the position shown in Figs. 3 and 4 of the drawing for display or other purposes, it being understood that the separate boxes or article containers 22 may be removed individually from the mounting and display card as the same are sold.

In Fig. 5 of the drawing, I have shown a slight modification wherein a mounting and display sheet 31 is employed and divided by folding lines 32, 33, 34 and 35 into sections 36, 37, 38, 39 and 40 similar in number to the sections 15 to 19 inclusive, the section 38 being of less width than the section 17 or in other words being equal to the width or depth of one of the packages 22*a*.

In this construction, two of the packages are arranged on the section 37 and one package on the section 39, the latter being of such arrangement as to be positioned between the packages 22*a* on the section 37 when the entire structure is collapsed in the manner of collapsing the device shown in Figs. 1 to 4 inclusive, the resulting package being of substantially one half the thickness of the package shown in Fig. 2. The sections 37 and 39 are provided with the hook-shaped supporting tongues 21*a* similar to the tongues 21. In connection with the structure shown in Fig. 5, it will be apparent that any desired number of the boxes or articles 22*a* may be arranged on a mounting card of a size suitable therefor and in any desired staggered relation.

In considering the structure shown in Figs. 1 to 4 inclusive, it will be apparent that my invention is not limited to the arrangement of any specific number of the boxes 22 on the separate sections of the display; and various other changes in and modifications of the construction herein shown and described may be made within the scope of the appended claims without departing from the spirit of my invention or sacrificing its advantages.

Having fully described my invention, what I claim as new and desire to secure by Letters Patent, is:—

1. A package of the class described consisting of an elongated mounting member divided by transverse score lines to form two comparatively large article supporting sections, a section spacing the first named sections, and an upper suspending section, said article supporting sections being foldable one upon the other and adapted to be arranged in spaced relation with the articles of said sections on adjacent faces thereof, and said article supporting sections having transversely spaced pairs of hook-shaped fingers fashioned from the material thereof and arranged at the upper and lower edges of said sections and adapted to engage the ends of elongated articles arranged transversely and longitudinally of said sections.

2. An article of manufacture of the class described comprising a mounting and display member having straight and continuous boundary edges, a plurality of pairs of supporting devices spaced transversely and longitudinally of said member and fashioned from the material thereof, said pairs of supporting devices being adapted to support elongated articles arranged transversely of said member and spaced longitudinally thereon, and said member being folded transversely into position to form thereof and of the articles thereon a compact package, the boundary walls of which are formed by the edges of said member and the long sides of the articles arranged at said edges.

3. An article of manufacture of the class described comprising a mounting and display member having straight and continuous boundary edges, a plurality of pairs of supporting devices spaced transversely and longitudinally of said member and fashioned from the material thereof, said pairs of supporting devices being adapted to support elongated articles arranged transversely of said member and spaced longitudinally thereon, said member being folded transversely into position to form thereof and of the articles thereon a compact package, the boundary walls of which are formed by the edges of said

member and the long sides of the articles arranged at said edges, and said members being adapted to be extended to form a support and display with the transversely arranged articles in abutting relation and with the respective groups of articles spaced vertically on said member.

4. An article of manufacture of the class described comprising a mounting and display member having straight and continuous boundary edges, a plurality of pairs of supporting devices spaced transversely and longitudinally of said member and fashioned from the material thereof, said pairs of supporting devices being adapted to support elongated articles arranged transversely of said member and spaced longitudinally thereon, said member being folded transversely into position to form thereof and of the articles thereon a compact package, the boundary walls of which are formed by the edges of said member and the long sides of the articles arranged at said edges, and said pairs of supporting devices being hook-shaped in cross sectional form with the ends of the hooks of each pair directed toward each other.

In testimony that I claim the foregoing as my invention I have signed my name this 3rd day of April 1929.

LOUIS J. RUSSELL.